DATE REVISED: 1/5/10

CATALOG NUMBER	"A" INTERFACE
R008-L13-05-T	FULL DETENT
R008-L15-05-T	SMOOTH BORE

MATERIAL AND FINISH

CENTER CONTACT AND HOUSING:	BeCu; GOLD PLATE 75 MICROINCHES TYPICAL OVER NICKEL PLATE 100 MICROINCHES TYPICAL.
DIELECTRIC:	TORLON
ALIGNMENT PLUG:	VIRGIN PTFE

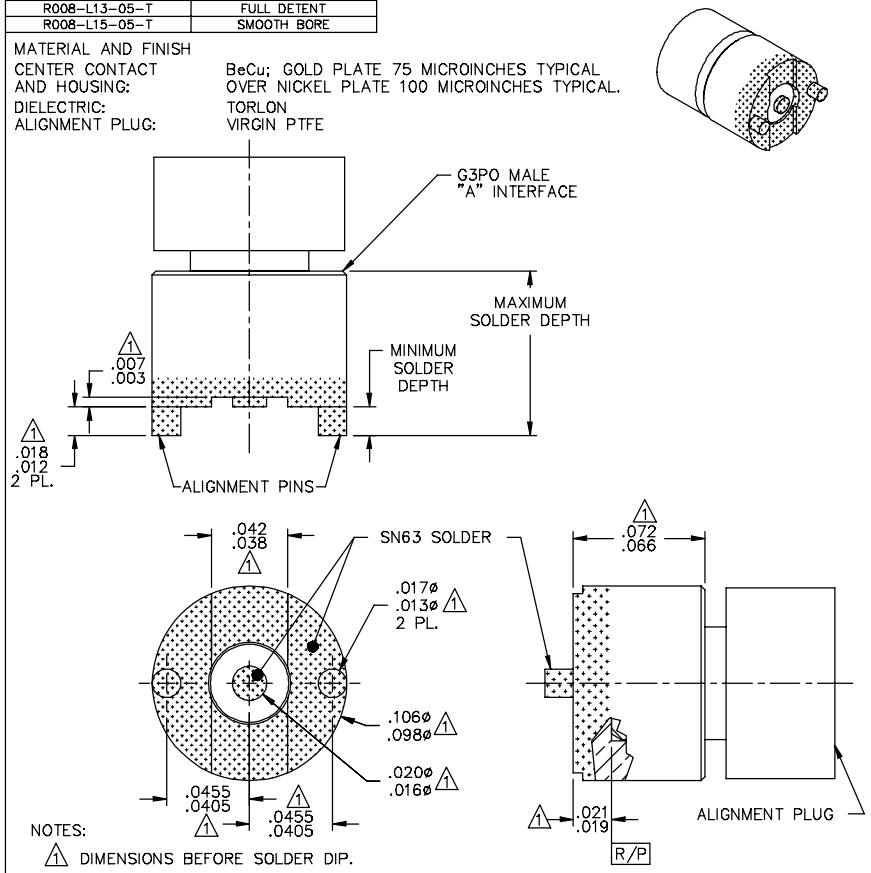

NOTES:

1. DIMENSIONS BEFORE SOLDER DIP.
2. CATALOG NUMBERS R008-L13-05-T@T13 AND R008-L15-05-T@T13 ARE PACKAGED IN A 13" TAPE AND REEL.

SHEET 1 OF 2

This drawing and any data contained herein is the property of Corning Gilbert Inc., and constitutes and contains proprietary and confidential information. Neither receipt nor possession of this drawing confers or transfers any right to duplicate, use or disclose any information contained herein except as expressly authorized by Corning Gilbert Inc.

G3PO MALE CATCHERS MITT PCB SHROUD (TAB DETENT) WITH NAILHEAD PIN, SOLDER DIPPED	IDENT CODE: 82316 REVISION: A	Corning Gilbert Inc.

SOURCE FILE: SK-3490	DWG. NO.: OL-R008-L1X-05-T	ASSY. PROC.: —

DATE REVISED: 1/5/10

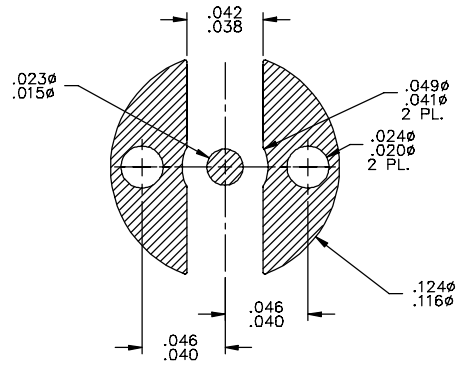

PRINTED WIRING BOARD FOOTPRINT

NOTES:

1. ALL INTERNAL RADII .001 MAXIMUM.

SHEET 2 OF 2

This drawing and any data contained herein is the property of Corning Gilbert Inc., and constitutes and contains proprietary and confidential information. Neither receipt nor possession of this drawing confers or transfers any right to duplicate, use or disclose any information contained herein except as expressly authorized by Corning Gilbert Inc.

G3PO MALE CATCHERS MITT PCB SHROUD (TAB DETENT) WITH NAILHEAD PIN, SOLDER DIPPED	IDENT CODE: 82316 REVISION: A	Corning Gilbert Inc.

SOURCE FILE: SK-3490	DWG. NO.: OL-R008-L1X-05-T	ASSY. PROC.: —